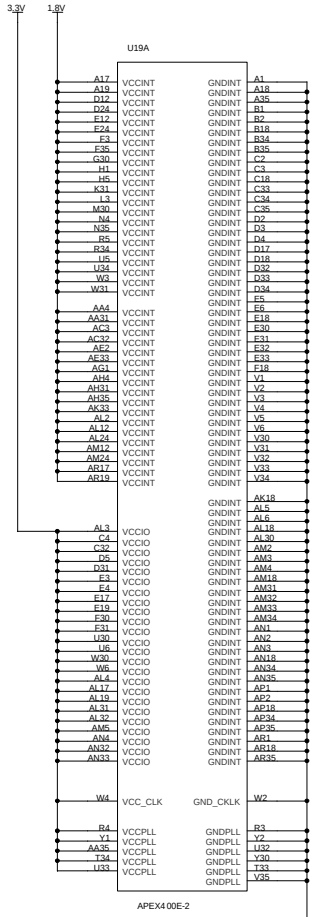

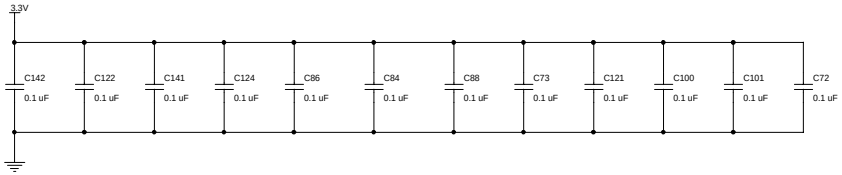

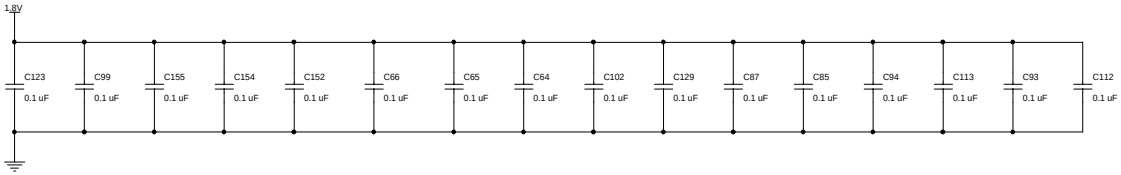

APEX PART A

Applied Microelectronics Inc. 77 Chain Lake Drive Halifax, Nova Scotia Canada, B3S 1E1	Title: **ALTERA SOPC DEVELOPMENT BOARD**	
Document Number: SCH-002128-02		Rev: 2
Drawn By: Jean Quirion	Checked By: Bruce Oakley	
Date: Tuesday, July 27, 1999	Release Date: Friday, January 14, 2000	
Sheet 1 of 24	Project Number: EB 994	

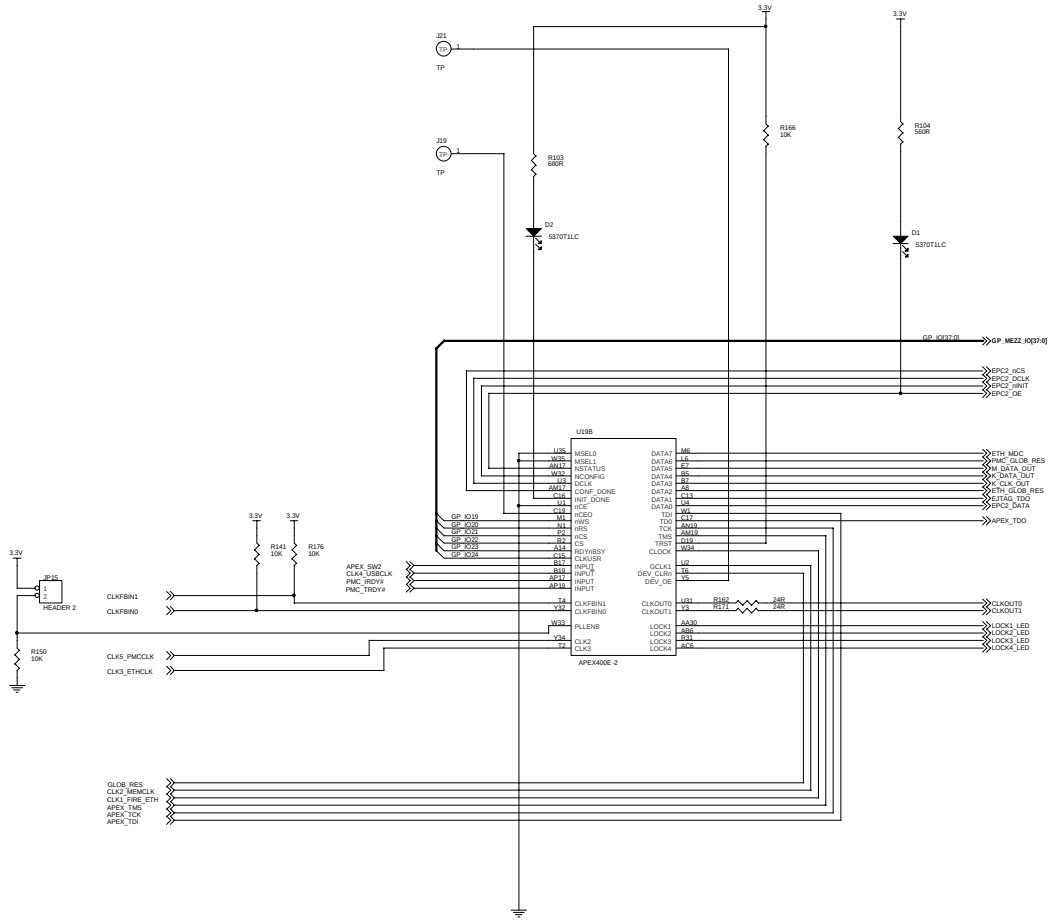

APEX PART B

Applied Microelectronics Inc. 77 Chain Lake Drive Halifax, Nova Scotia Canada, B3S 1E1	Title: **ALTERA SOPC DEVELOPMENT BOARD**	
Document Number: SCH-002128-02		Rev: 2
Drawn By: Jean Quirion	Checked By: Bruce Oakley	
Date: Tuesday, July 27, 1999	Release Date: Friday, January 14, 2000	
Sheet 2 of 24	Project Number: EB 994	

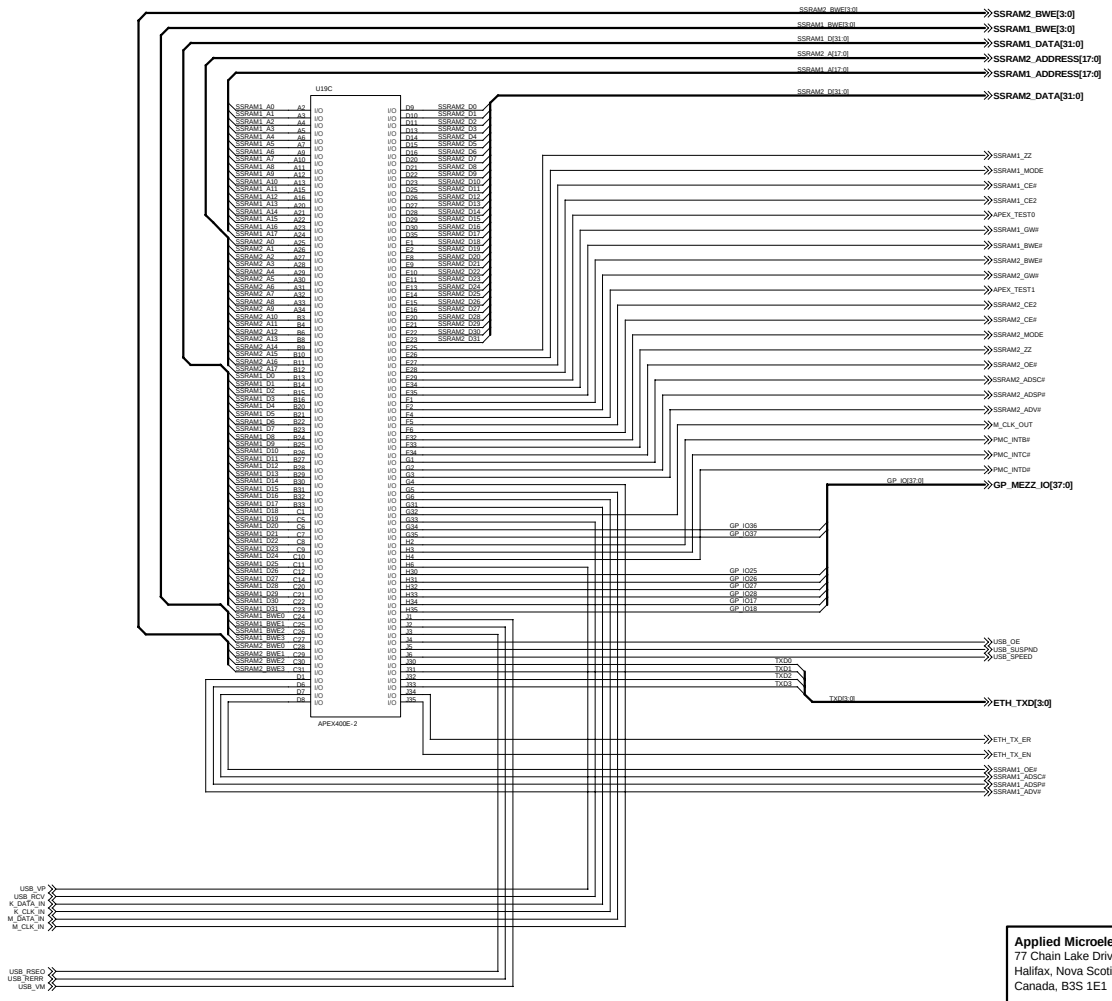

APEX PART C

Applied Microelectronics Inc. 77 Chain Lake Drive Halifax, Nova Scotia Canada, B3S 1E1	Title: **ALTERA SOPC DEVELOPMENT BOARD**
Document Number: SCH-002128-02	Rev: 2
Drawn By: Jean Quirion	Checked By: Bruce Oakley
Date: Tuesday, July 27, 1999	Release Date: Friday, January 14, 2000
Sheet 3 of 24	Project Number: EB 994

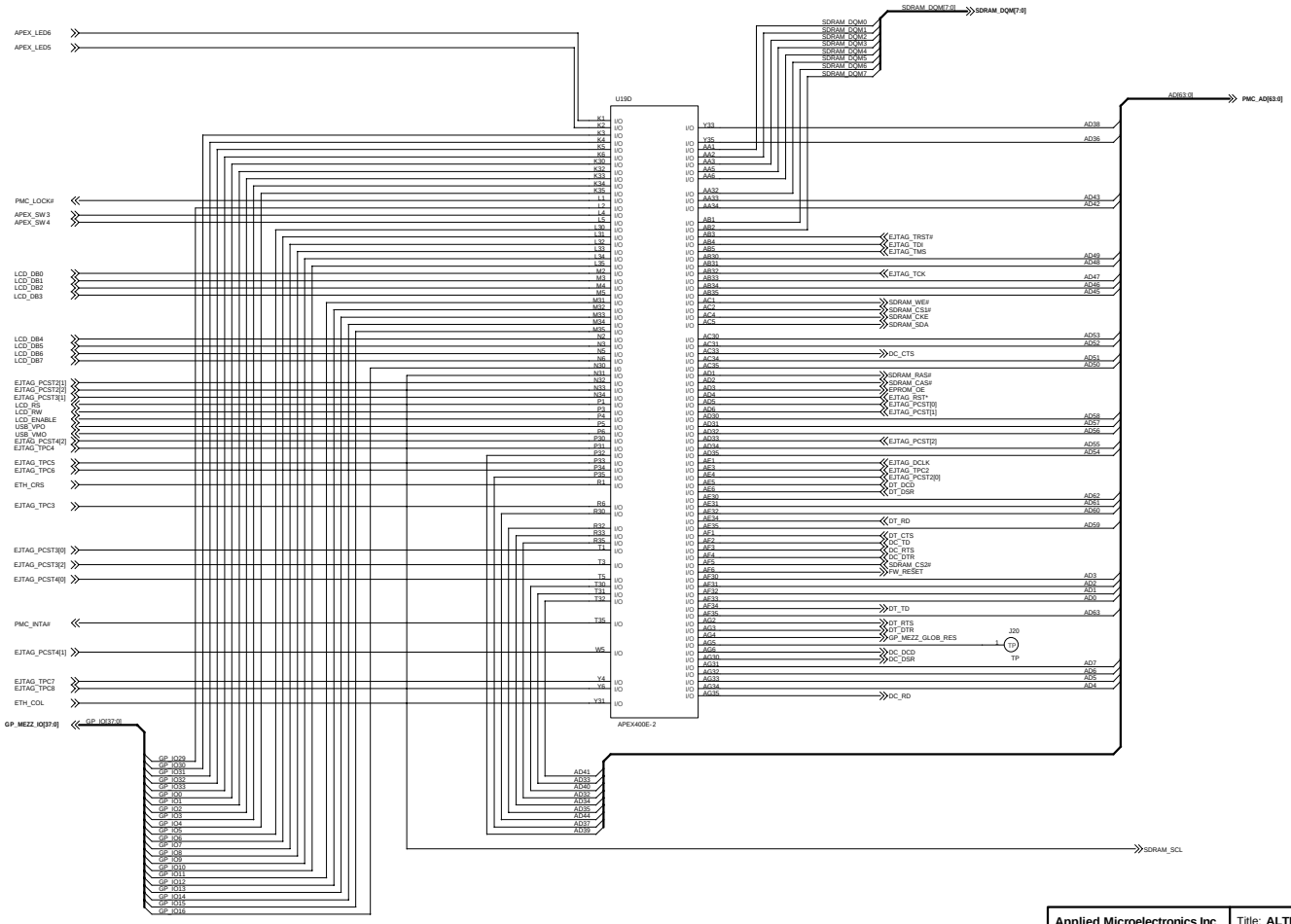

APEX PART D

Applied Microelectronics Inc.
77 Chain Lake Drive
Halifax, Nova Scotia
Canada, B3S 1E1

Title: **ALTERA SOPC DEVELOPMENT BOARD**

Document Number:	SCH-002128-02		Rev: 2
Drawn By:	Jean Quirion	Checked By:	Bruce Oakley
Date:	Tuesday, July 27, 1999	Release Date:	Friday, January 14, 2000
Sheet 4 of 24		Project Number:	EB 994

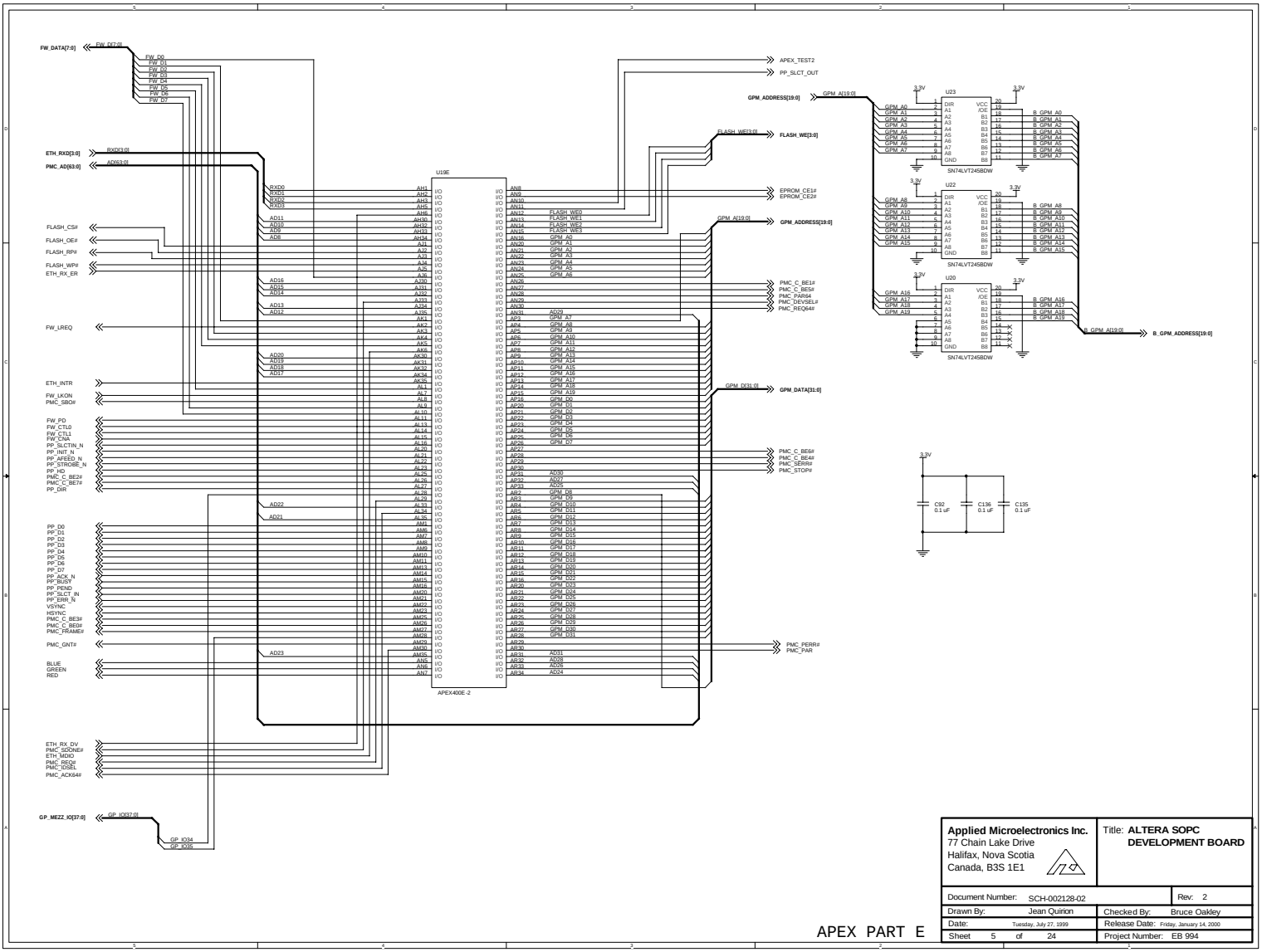

Applied Microelectronics Inc. 77 Chain Lake Drive Halifax, Nova Scotia Canada, B3S 1E1	Title: **ALTERA SOPC DEVELOPMENT BOARD**
Document Number: SCH-002128-02	Rev: 2
Drawn By: Jean Quirion	Checked By: Bruce Oakley
Date: Tuesday, July 27, 1999	Release Date: Friday, January 14, 2000
Sheet 5 of 24	Project Number: EB 994

APEX PART E

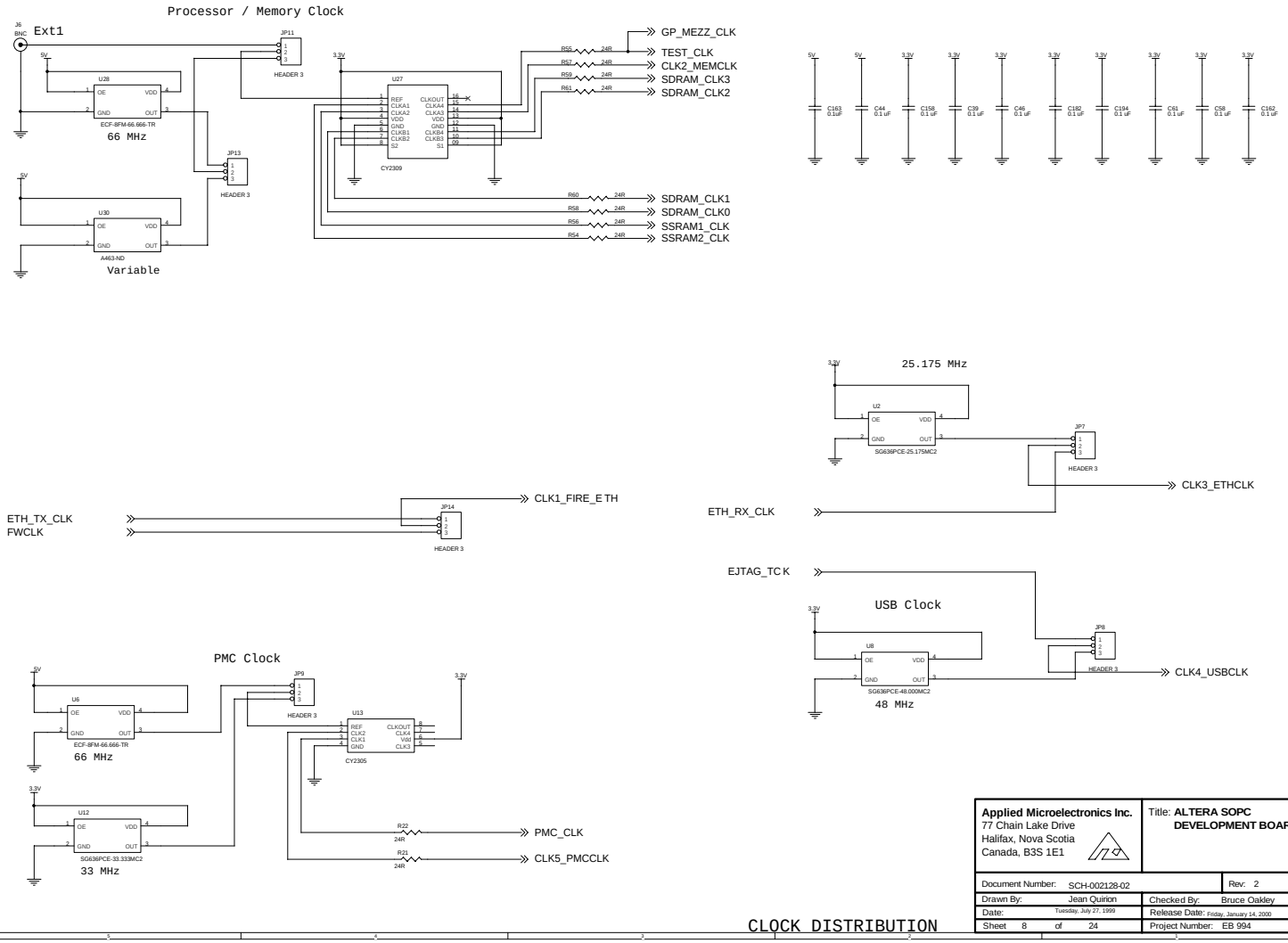

CLOCK DISTRIBUTION

Applied Microelectronics Inc. 77 Chain Lake Drive Halifax, Nova Scotia Canada, B3S 1E1	Title: **ALTERA SOPC DEVELOPMENT BOARD**
Document Number: SCH-002128-02	Rev: 2
Drawn By: Jean Quirion	Checked By: Bruce Oakley
Date: Tuesday, July 27, 1999	Release Date: Friday, January 14, 2000
Sheet 8 of 24	Project Number: EB 994

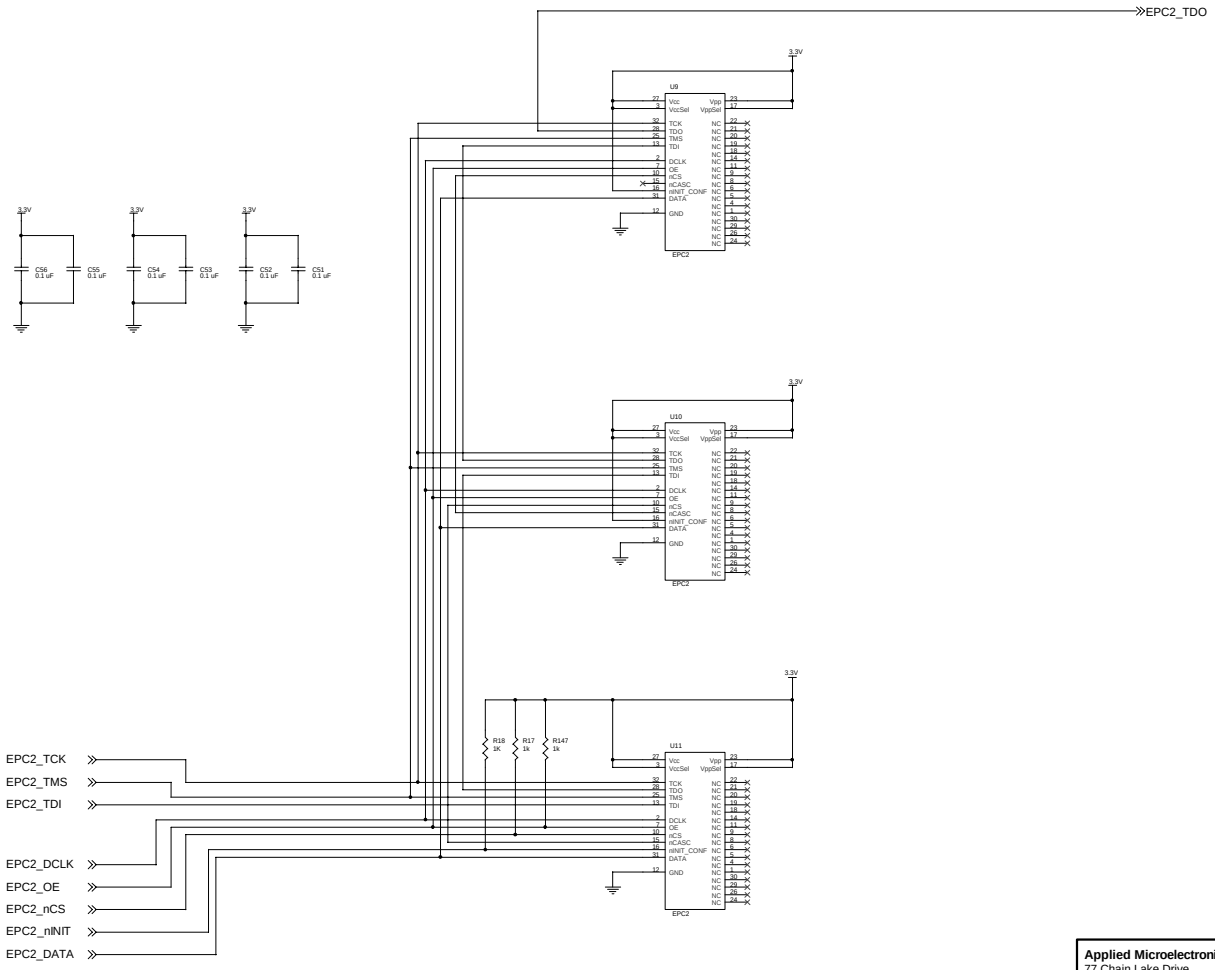

EPC2 INTERFACE

Applied Microelectronics Inc. 77 Chain Lake Drive Halifax, Nova Scotia Canada, B3S 1E1	Title: **ALTERA SOPC DEVELOPMENT BOARD**	
Document Number: SCH-002128-02		Rev: 2
Drawn By: Jean Quirion	Checked By: Bruce Oakley	
Date: Tuesday, July 27, 1999	Release Date: Friday, January 14, 2000	
Sheet 6 of 24	Project Number: EB 994	

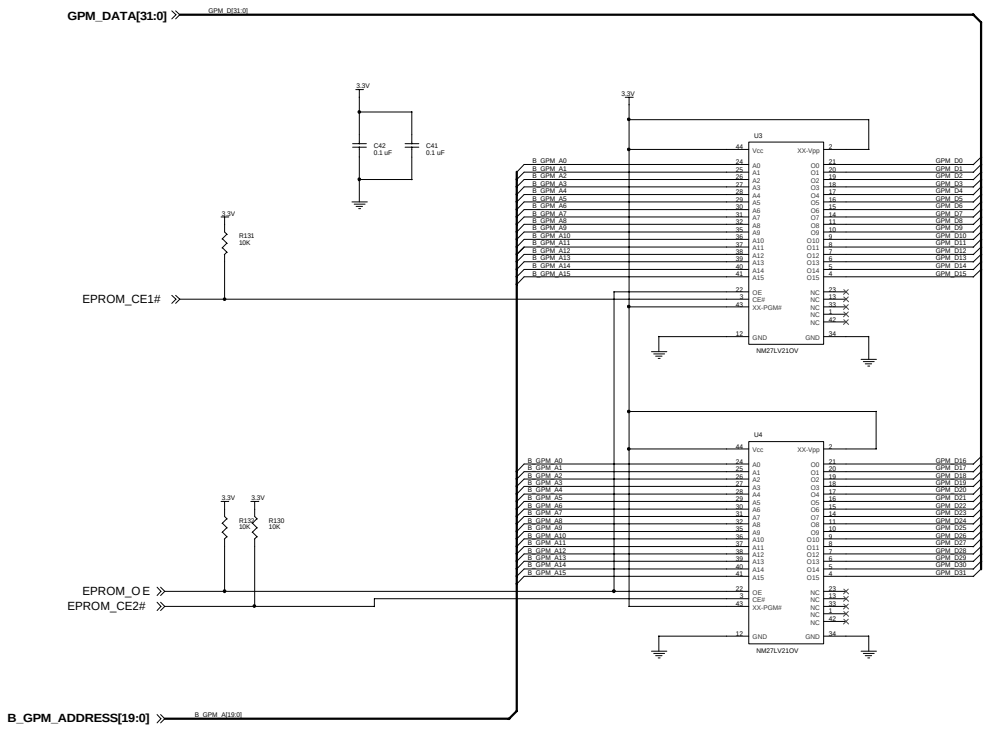

Applied Microelectronics Inc.
77 Chain Lake Drive
Halifax, Nova Scotia
Canada, B3S 1E1

Title: **ALTERA SOPC DEVELOPMENT BOARD**

Document Number:	SCH-002128-02		Rev: 2
Drawn By:	Jean Quirion	Checked By:	Bruce Oakley
Date:	Tuesday, July 27, 1999	Release Date:	Friday, January 14, 2000
Sheet	11 of 24	Project Number:	EB 994

EPROM INTERFACE

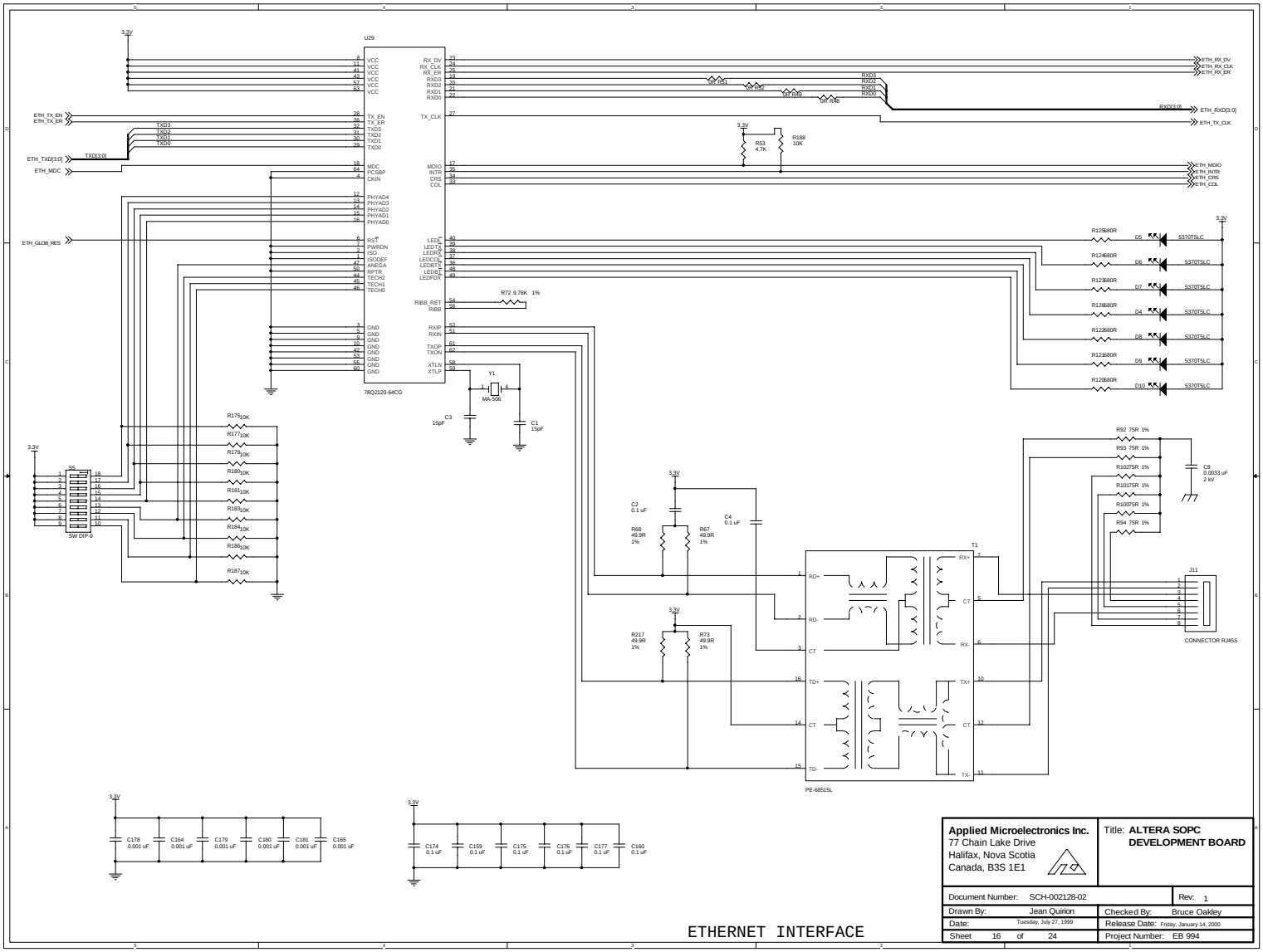

ETHERNET INTERFACE

Applied Microelectronics Inc. 77 Chain Lake Drive Halifax, Nova Scotia Canada, B3S 1E1	Title: **ALTERA SOPC DEVELOPMENT BOARD**
Document Number: SCH-002128-02	Rev: 1
Drawn By: Jean Quirion	Checked By: Bruce Oakley
Date: Tuesday, July 27, 1999	Release Date: Friday, January 14, 2000
Sheet 16 of 24	Project Number: EB 994

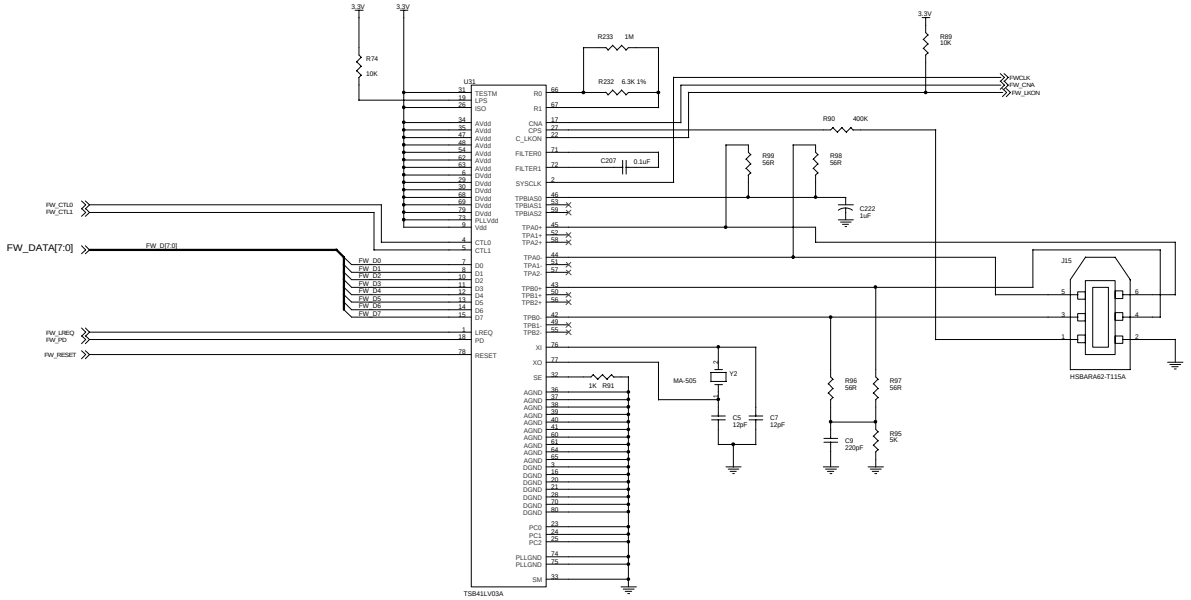

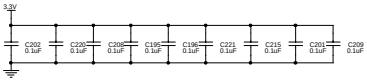

FIREWIRE INTERFACE

Applied Microelectronics Inc.
77 Chain Lake Drive
Halifax, Nova Scotia
Canada, B3S 1E1

Title: **ALTERA SOPC DEVELOPMENT BOARD**

Document Number:	SCH-002128-02	Rev:	2
Drawn By:	Jean Quirion	Checked By:	Bruce Oakley
Date:	Tuesday, July 27, 1999	Release Date:	Friday, January 14, 2000
Sheet 18 of 24		Project Number:	EB 994

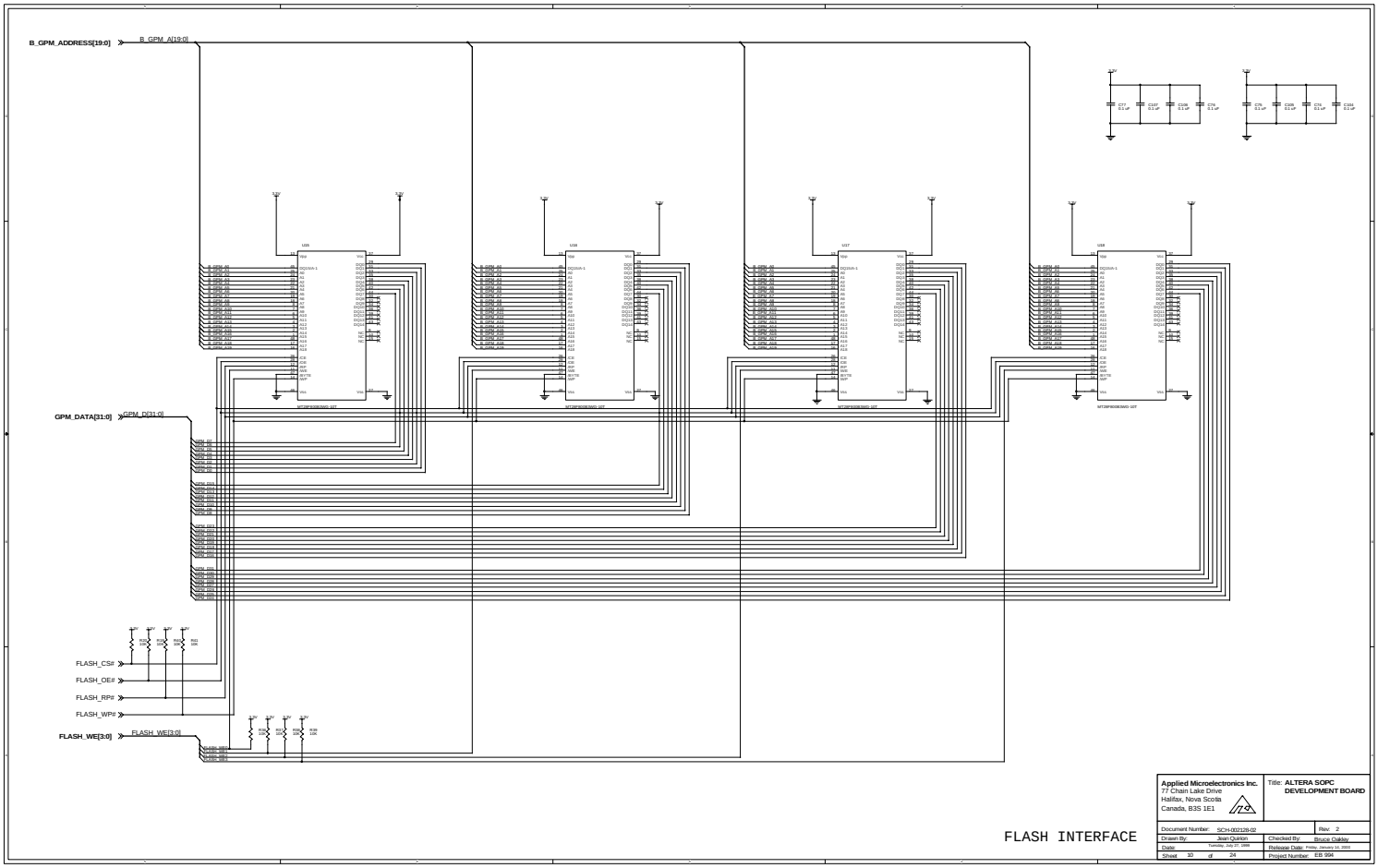

FLASH INTERFACE

Applied Microelectronics Inc. 77 Chain Lake Drive Halifax, Nova Scotia Canada, B3S 1E1		Title: ALTERA SOPC DEVELOPMENT BOARD	
Document Number:	SCH-002128-02		Rev: 2
Drawn By:	Jean Quinton	Checked By:	Bruce Oakley
Date:	Tuesday, July 27, 1999	Release Date:	Friday, January 14, 2000
Sheet 10 of 24		Project Number:	EB 994

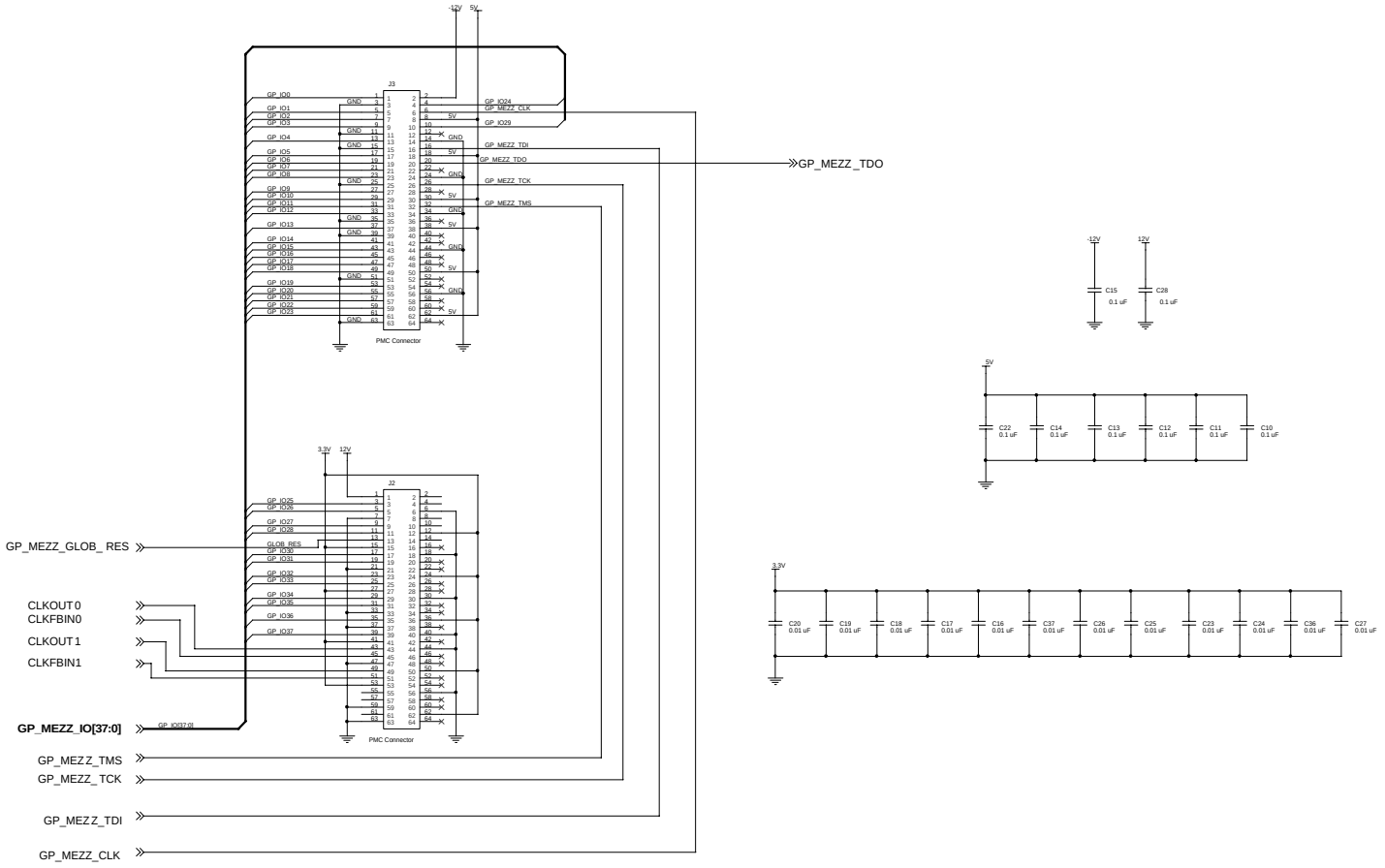

GP_MEZZANINE INTERFACE

Applied Microelectronics Inc. 77 Chain Lake Drive Halifax, Nova Scotia Canada, B3S 1E1		Title: **ALTERA SOPC DEVELOPMENT BOARD**	
Document Number:	SCH-002128-02		Rev: 2
Drawn By:	Jean Quirion	Checked By:	Bruce Oakley
Date:	Tuesday, July 27, 1999	Release Date:	Friday, January 14, 2000
Sheet	15 of 24	Project Number:	EB 994

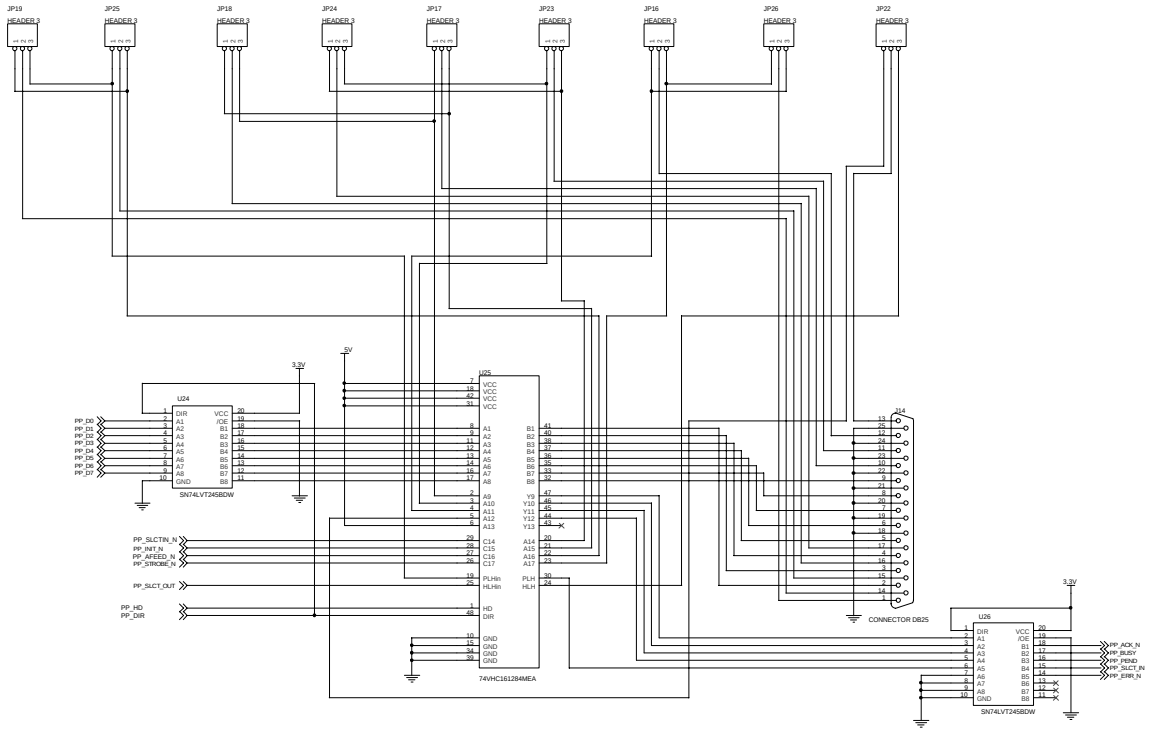

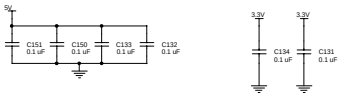

IEEE 1284 INTERFACE

Applied Microelectronics Inc. 77 Chain Lake Drive Halifax, Nova Scotia Canada, B3S 1E1	Title: **ALTERA SOPC DEVELOPMENT BOARD**
Document Number: SCH-002128-02	Rev: 2
Drawn By: Jean Quirion	Checked By: Bruce Oakley
Date: Tuesday, July 27, 1999	Release Date: Friday, January 14, 2000
Sheet 17 of 24	Project Number: EB 994

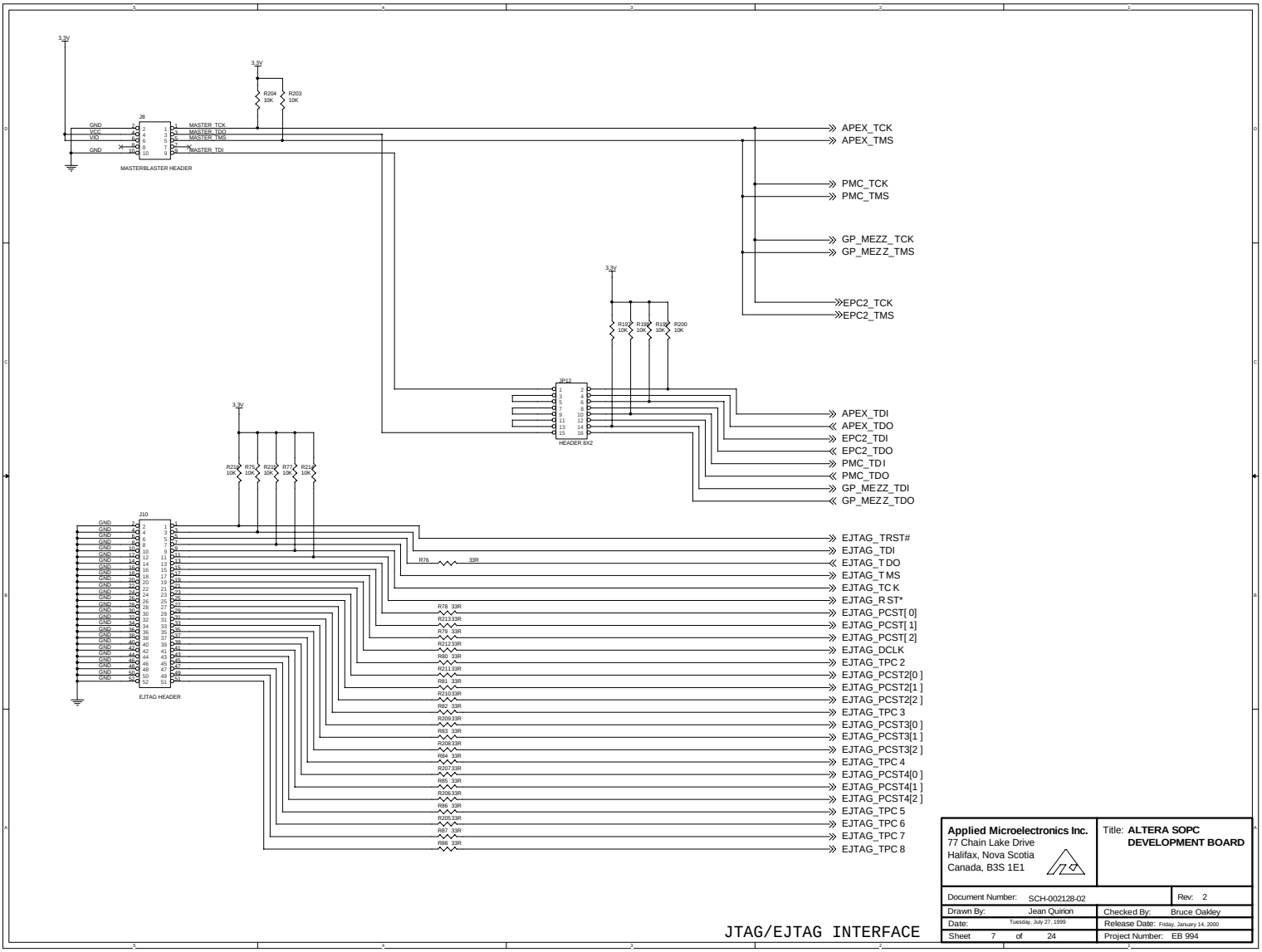

Applied Microelectronics Inc.
77 Chain Lake Drive
Halifax, Nova Scotia
Canada, B3S 1E1

Title: **ALTERA SOPC DEVELOPMENT BOARD**

Document Number:	SCH-002128-02		Rev: 2
Drawn By:	Jean Quirion	Checked By:	Bruce Oakley
Date:	Tuesday, July 27, 1999	Release Date:	Friday, January 14, 2000
Sheet 7 of 24		Project Number:	EB 994

JTAG/EJTAG INTERFACE

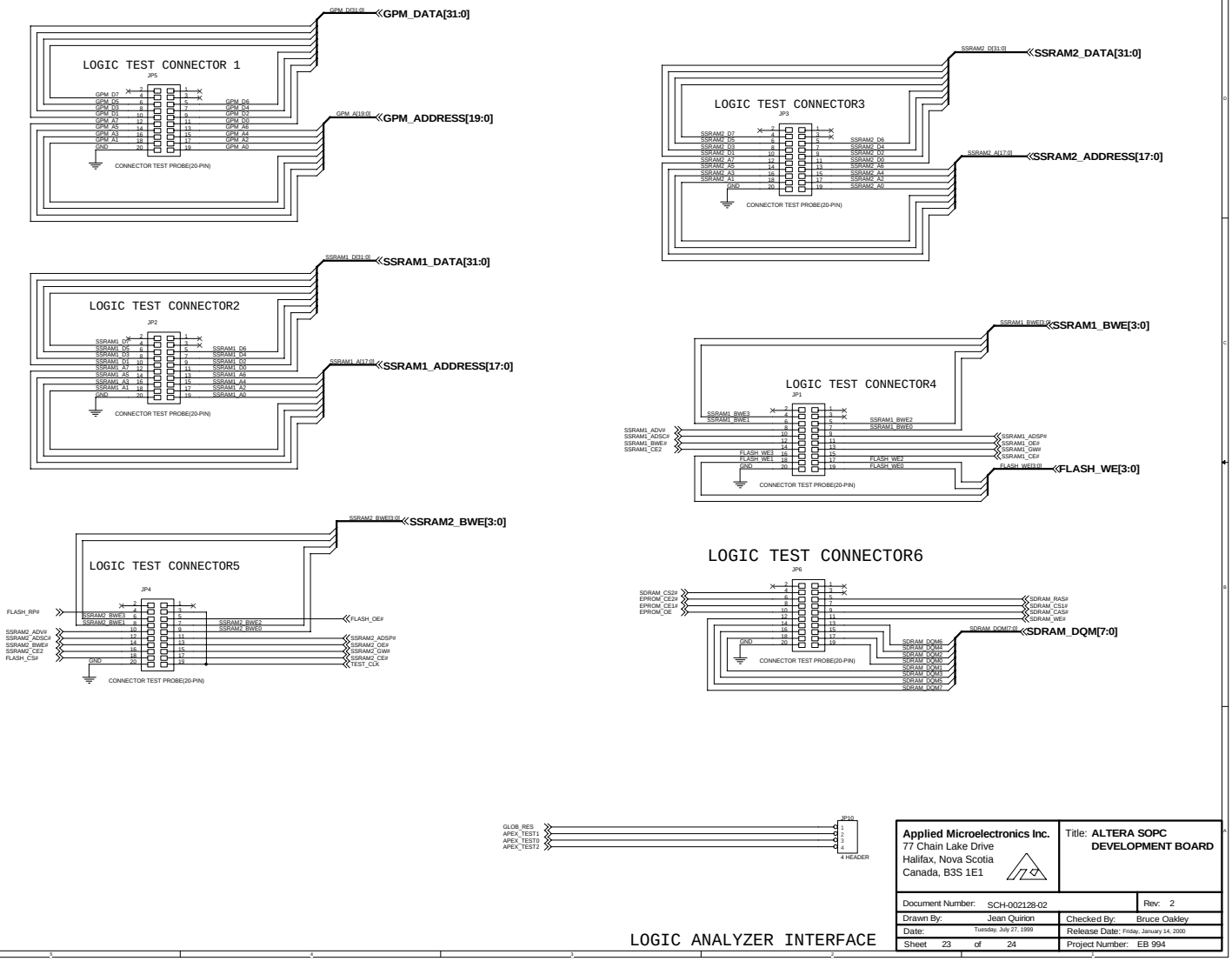

Applied Microelectronics Inc.
77 Chain Lake Drive
Halifax, Nova Scotia
Canada, B3S 1E1

Title: **ALTERA SOPC DEVELOPMENT BOARD**

Document Number:	SCH-002128-02		Rev: 2
Drawn By:	Jean Quirion	Checked By:	Bruce Oakley
Date:	Tuesday, July 27, 1999	Release Date:	Friday, January 14, 2000
Sheet 23 of 24		Project Number:	EB 994

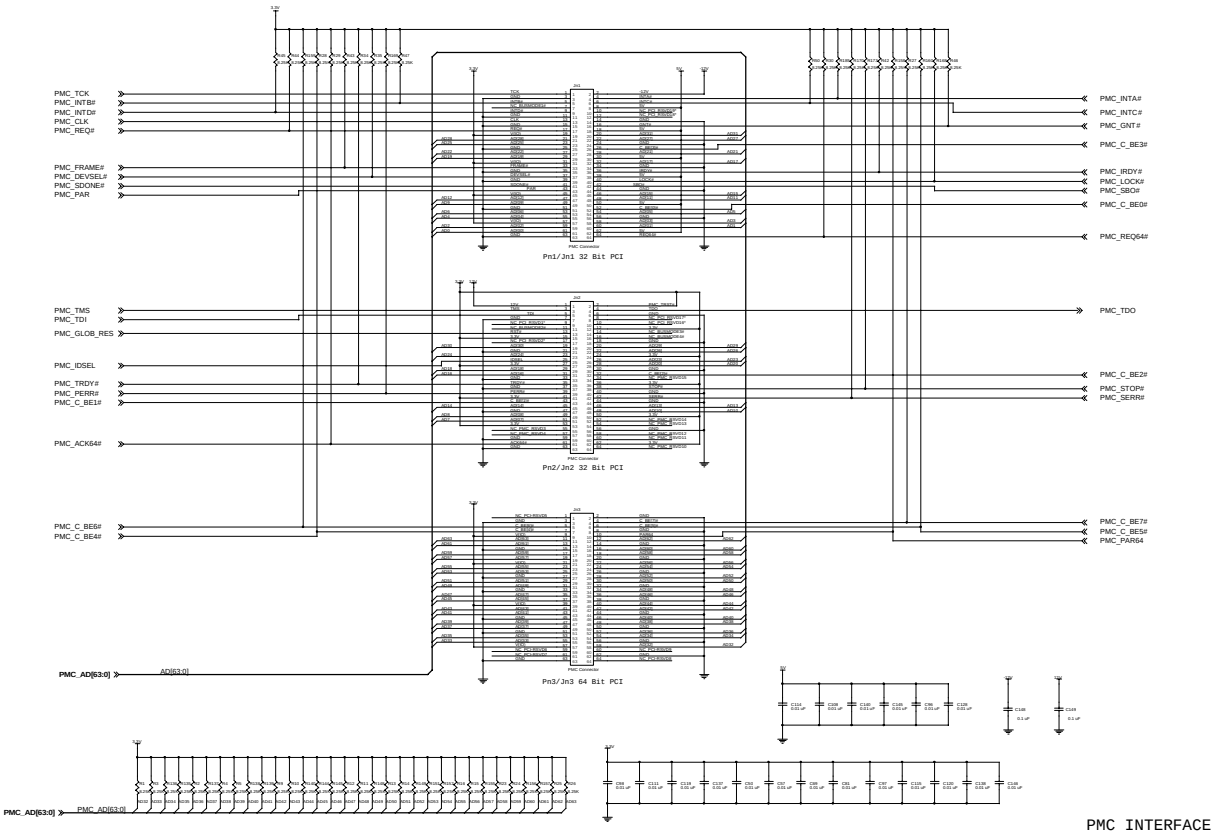

PMC INTERFACE

Applied Microelectronics Inc. 77 Chain Lake Drive Halifax, Nova Scotia Canada, B3S 1E1	Title: **ALTERA SOPC DEVELOPMENT BOARD**
Document Number: SCH-D22128-02	Rev: 2
Drawn By: Jean Quiron	Checked By: Bruce Oakley
Date: Tuesday, July 27, 1999	Release Date: Friday, January 14, 2000
Sheet 14 of 24	Project Number: EB 994

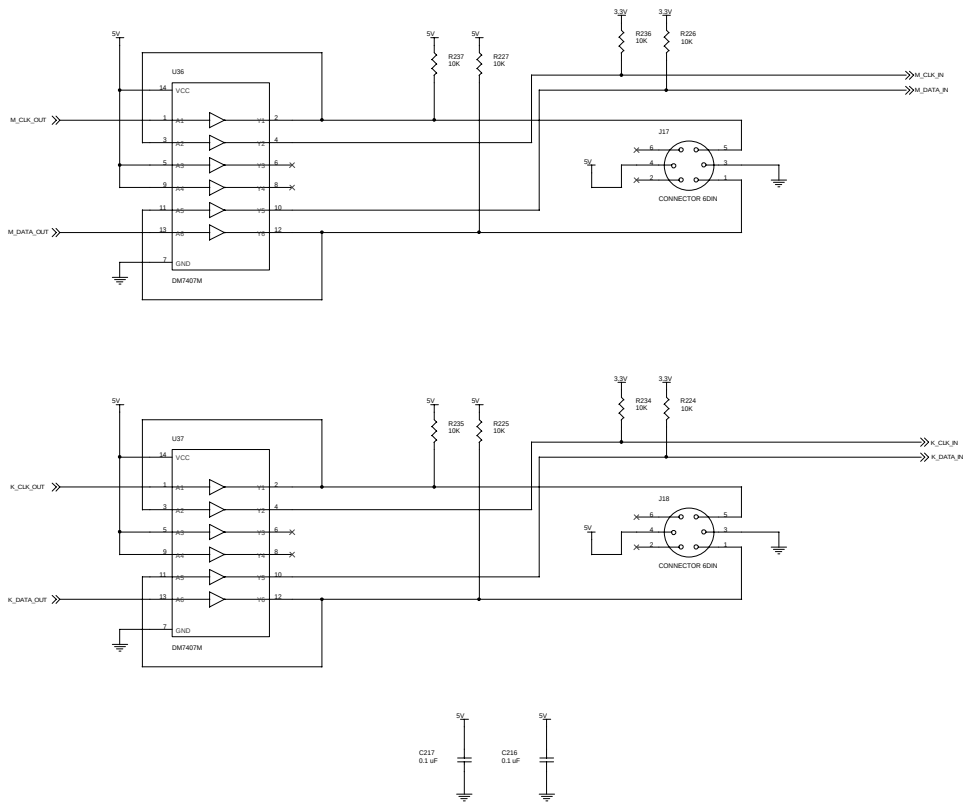

PS2 INTERFACE

Applied Microelectronics Inc. 77 Chain Lake Drive Halifax, Nova Scotia Canada, B3S 1E1	Title: **ALTERA SOPC DEVELOPMENT BOARD**
Document Number: SCH-002128-02	Rev: 2
Drawn By: Jean Quirion	Checked By: Bruce Oakley
Date: Tuesday, July 27, 1999	Release Date: Friday, January 14, 2000
Sheet 20 of 24	Project Number: EB 994

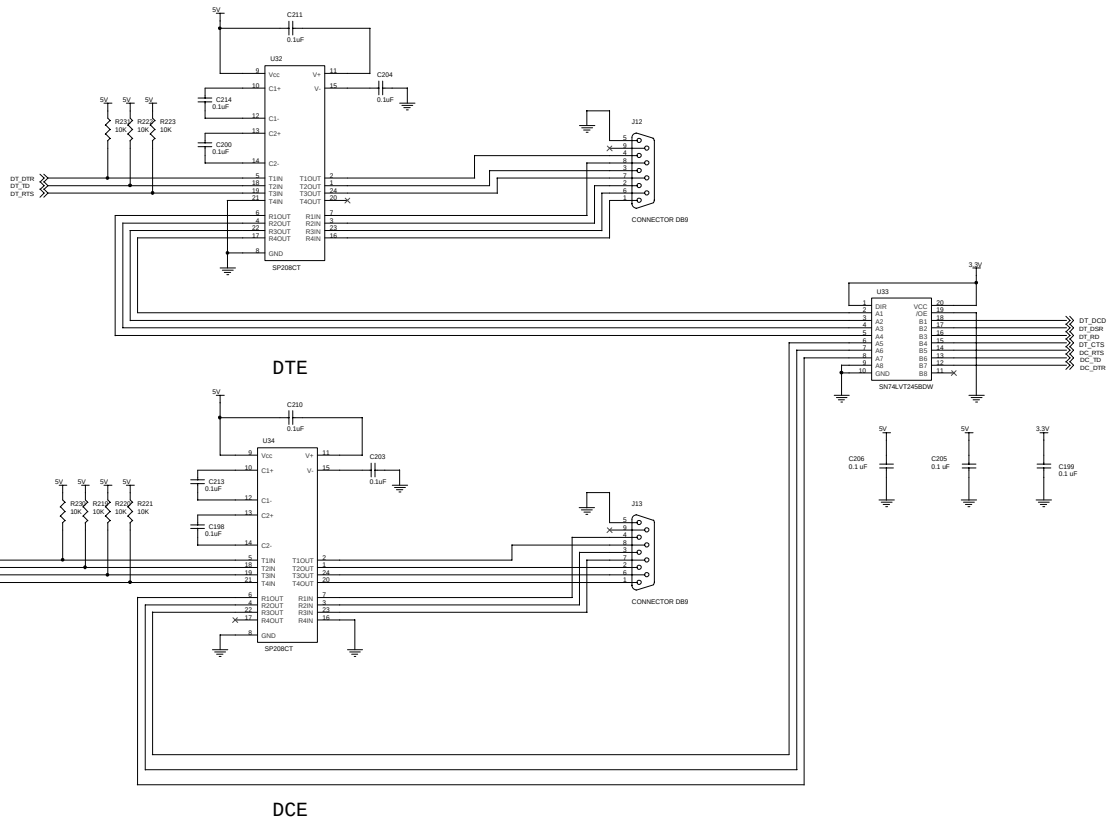

RS232 INTERFACE

Applied Microelectronics Inc. 77 Chain Lake Drive Halifax, Nova Scotia Canada, B3S 1E1	Title: **ALTERA SOPC DEVELOPMENT BOARD**	
Document Number: SCH-002128-02		Rev: 2
Drawn By: Jean Quirion	Checked By: Bruce Oakley	
Date: Tuesday, July 27, 1999	Release Date: Friday, January 14, 2000	
Sheet 19 of 24	Project Number: EB 994	

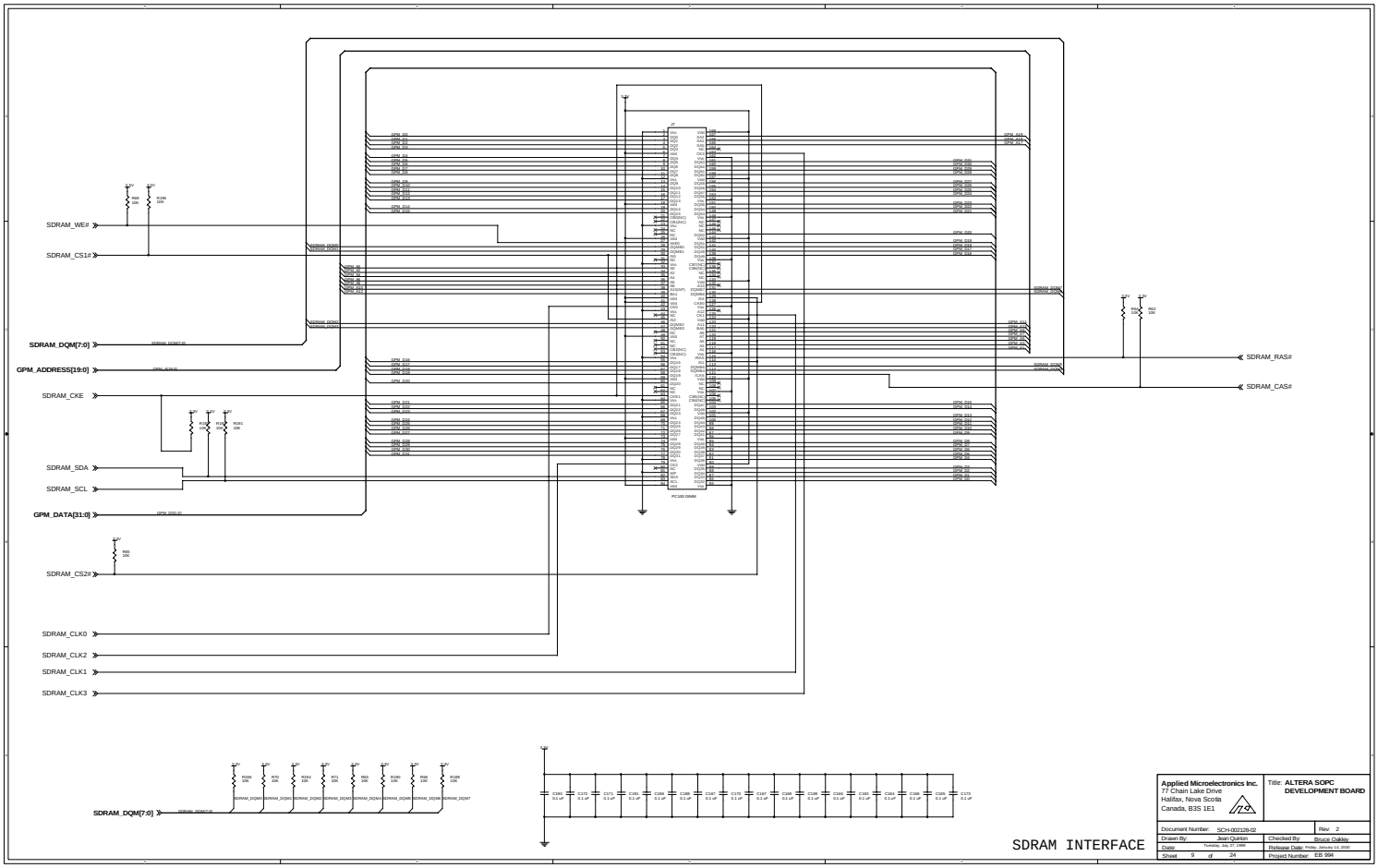

SDRAM INTERFACE

Applied Microelectronics Inc. 77 Chain Lake Drive Halifax, Nova Scotia Canada, B3S 1E1	Title: **ALTERA SOPC DEVELOPMENT BOARD**
Document Number: SCH-002128-02	Rev: 2
Drawn By: Jean Quiron	Checked By: Bruce Oakley
Date: Tuesday, July 27, 1999	Release Date: Friday, January 14, 2000
Sheet 9 of 24	Project Number: EB 994

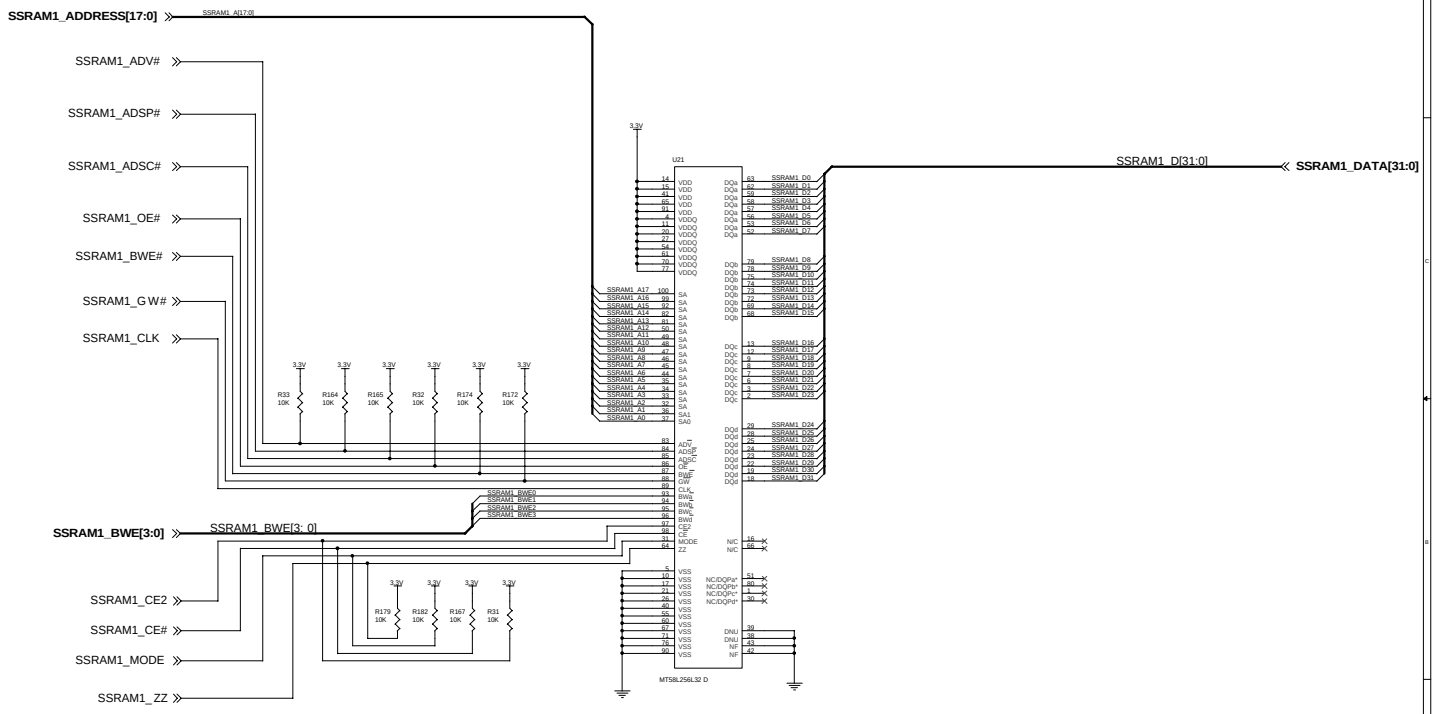

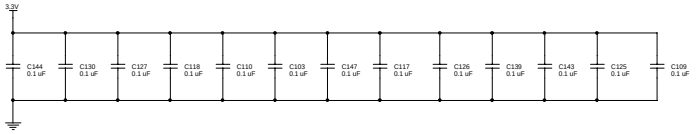

SSRAM INTERFACE 1

Applied Microelectronics Inc. 77 Chain Lake Drive Halifax, Nova Scotia Canada, B3S 1E1	Title: **ALTERA SOPC DEVELOPMENT BOARD**
Document Number: SCH-002128-02	Rev: 2
Drawn By: Jean Quirion	Checked By: Bruce Oakley
Date: Tuesday, July 27, 1999	Release Date: Friday, January 14, 2000
Sheet 12 of 24	Project Number: EB 994

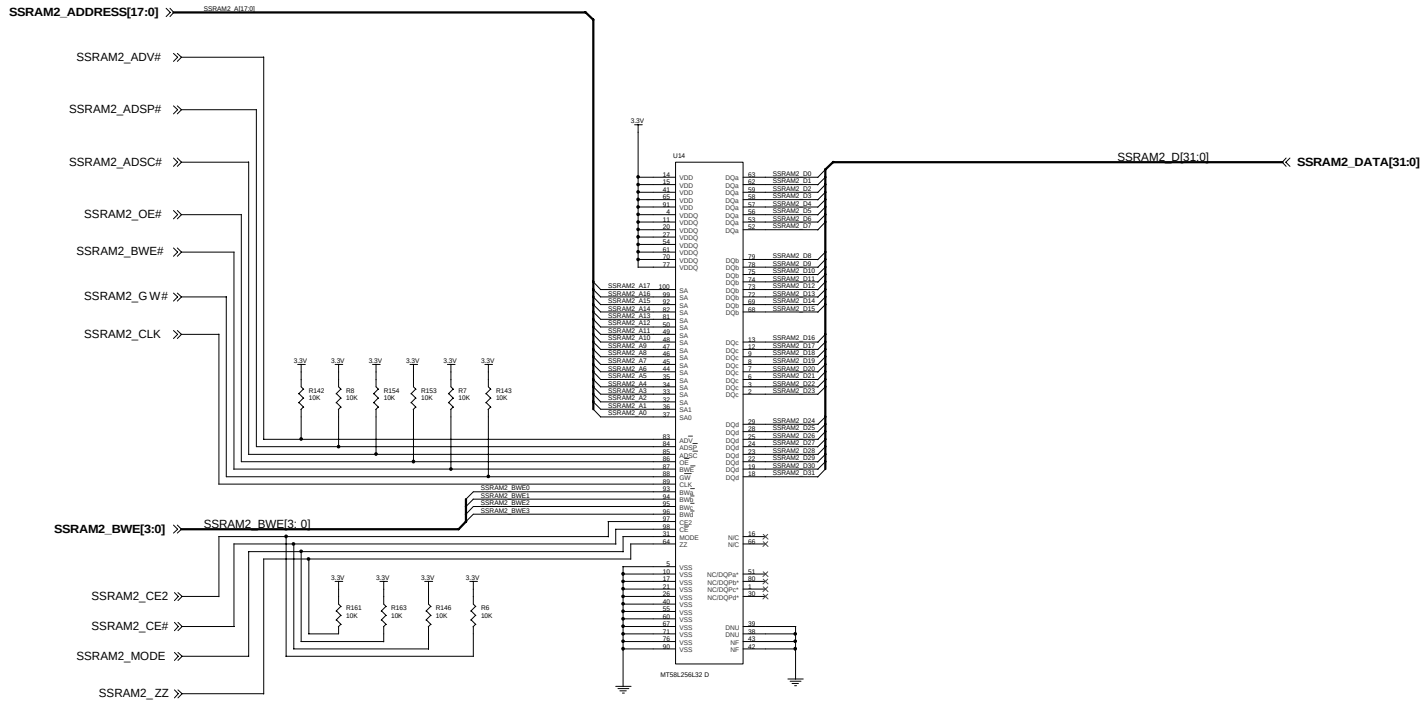

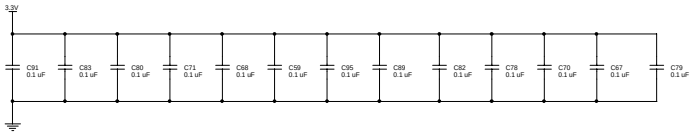

SSRAM INTERFACE 2

Applied Microelectronics Inc. 77 Chain Lake Drive Halifax, Nova Scotia Canada, B3S 1E1	Title: **ALTERA SOPC DEVELOPMENT BOARD**
Document Number: SCH-002128-02	Rev: 2
Drawn By: Jean Quirion	Checked By: Bruce Oakley
Date: Tuesday, July 27, 1999	Release Date: Friday, January 14, 2000
Sheet 13 of 24	Project Number: EB 994

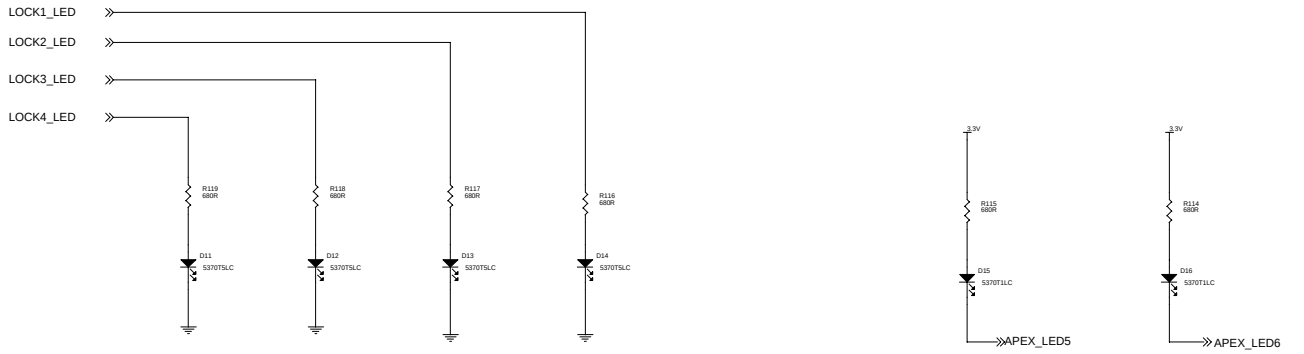

USER LEDS

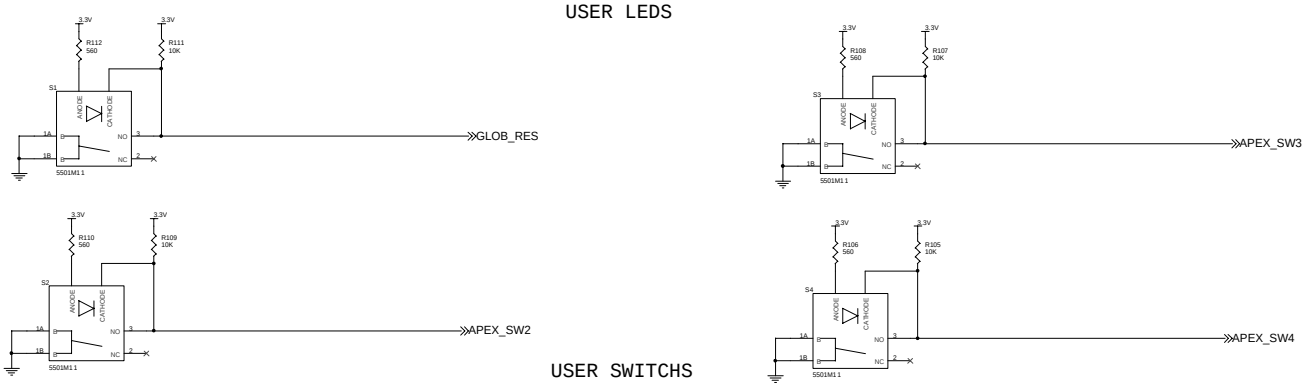

USER SWITCHS

USER SWITCHS AND LEDS INTERFACE

Applied Microelectronics Inc. 77 Chain Lake Drive Halifax, Nova Scotia Canada, B3S 1E1	Title: **ALTERA SOPC DEVELOPMENT BOARD**
Document Number: SCH-002128-02	Rev: 2
Drawn By: Jean Quirion	Checked By: Bruce Oakley
Date: Tuesday, July 27, 1999	Release Date: Friday, January 14, 2000
Sheet 22 of 24	Project Number: EB 994

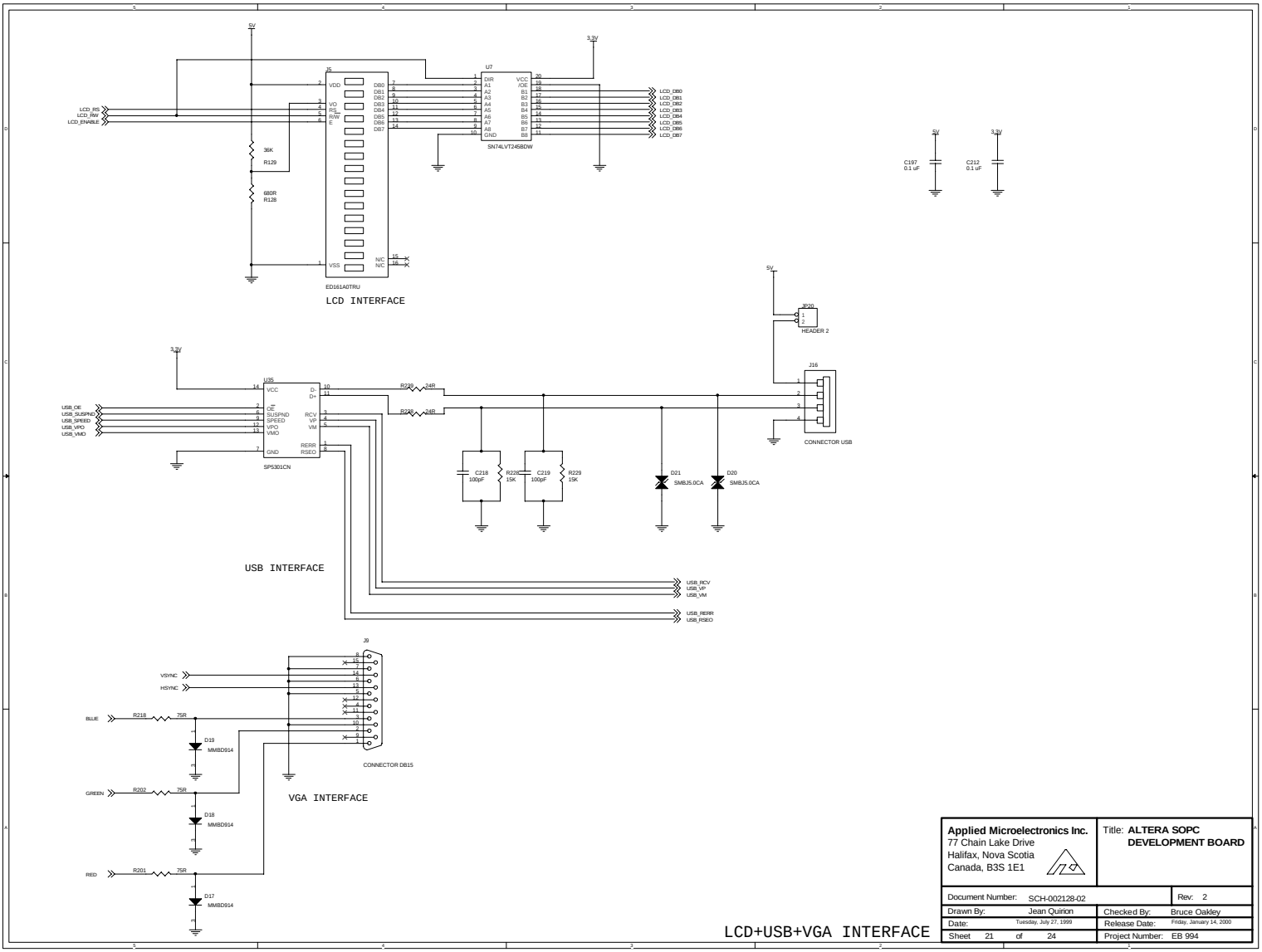

Applied Microelectronics Inc. 77 Chain Lake Drive Halifax, Nova Scotia Canada, B3S 1E1	Title: **ALTERA SOPC DEVELOPMENT BOARD**
Document Number: SCH-002128-02	Rev: 2
Drawn By: Jean Quirion	Checked By: Bruce Oakley
Date: Tuesday, July 27, 1999	Release Date: Friday, January 14, 2000
Sheet 21 of 24	Project Number: EB 994

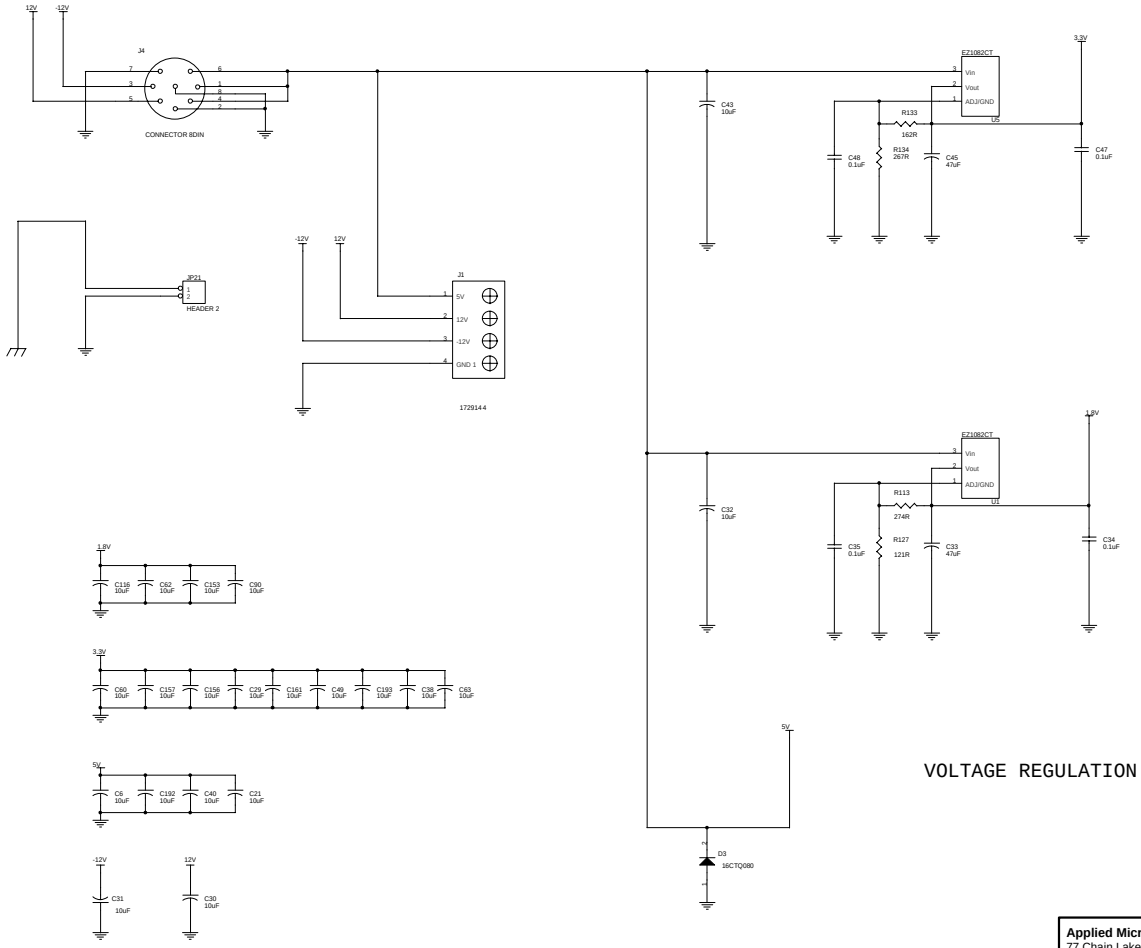

VOLTAGE REGULATION

Applied Microelectronics Inc. 77 Chain Lake Drive Halifax, Nova Scotia Canada, B3S 1E1	Title: **ALTERA SOPC DEVELOPMENT BOARD**
Document Number: SCH-002128-02	Rev: 1
Drawn By: Jean Quirion	Checked By: Bruce Oakley
Date: Tuesday, July 27, 1999	Release Date: Friday, January 14, 2000
Sheet 24 of 24	Project Number: EB 994