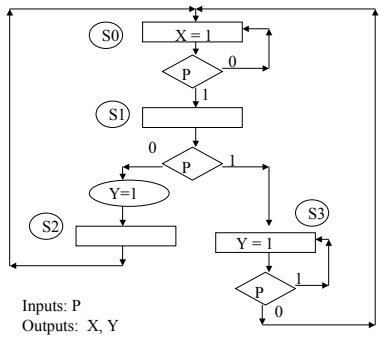

Inputs: P
Outputs: X, Y

Sample FSM for in-lab exam

Must use 2 DFFs for state elements, implement with 74XX parts in Parts kit.

State Table

P	PS	NS	X	Y
0	S0	S0	1	0
0	S1	S2	0	1
0	S2	S0	0	0
0	S3	S0	0	1
1	S0	S1	1	0
1	S1	S3	0	0
1	S2	S0	0	0
1	S3	S3	0	1

Pick State Encoding, Replace in Table

I choose S0=00, S1=01, S2=10, S3=11

P	PS	NS	X	Y
0	00	00	1	0
0	01	10	0	1
0	10	00	0	0
0	11	00	0	1
1	00	01	1	0
1	01	11	0	0
1	10	00	0	0
1	11	11	0	1

Write Equations

	PS		NS			
P	Q1	Q0	D1	D0	X	Y
0	0	0	0	0	1	0
0	0	1	1	0	0	1
0	1	0	0	0	0	0
0	1	1	0	0	0	1
1	0	0	0	1	1	0
1	0	1	1	1	0	0
1	1	0	0	0	0	0
1	1	1	1	1	0	1

Need equations for D1, D0, X, Y

D1 Equation

	PS		NS	
P	Q1	Q0	D1	D0
0	0	0	**0**	0
0	0	1	**1**	0
0	1	0	**0**	0
0	1	1	**0**	0
1	0	0	**0**	1
1	0	1	**1**	1
1	1	0	**0**	0
1	1	1	**1**	1

D1 =P' Q1' Q0 + P Q1' Q0 + P Q1 Q0

Simplify (algebraically or via K maps)

D1 = Q1' Q0 (P' + P) + P Q0 (Q1' + Q1)
= Q1' Q0 + P Q0

D0 Equation

	PS		NS	
P	Q1	Q0	D1	D0
0	0	0	0	**0**
0	0	1	1	**0**
0	1	0	0	**0**
0	1	1	0	**0**
1	0	0	0	**1**
1	0	1	1	**1**
1	1	0	0	**0**
1	1	1	1	**1**

Lets try a K-map for D0

Q1 Q0 \ P	0	1
00	0	1
01	0	1
11	0	1
10	0	0

D0 = P Q1' + P Q0

X Output Equation

P	Q1	Q0	X
0	0	0	1
0	0	1	0
0	1	0	0
0	1	1	0
1	0	0	1
1	0	1	0
1	1	0	0
1	1	1	0

Q1 Q0 \ P	0	1
00	1	1
01	0	0
11	0	0
10	0	0

X = Q1' Q0'

Could have done this by inspection of FSM – X only asserted in State S0, which is 00, which is Q1' Q0'

Y Output Equation

P	Q1	Q0	Y
0	0	0	0
0	0	1	1
0	1	0	0
0	1	1	1
1	0	0	0
1	0	1	0
1	1	0	0
1	1	1	1

Q1 Q0 \ P	0	1
00	0	0
01	1	0
11	1	1
10	0	0

Y = P' Q0 + Q1 Q0

Equation Summary

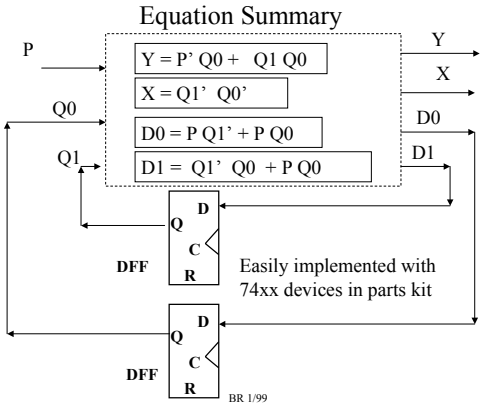

Easily implemented with 74xx devices in parts kit

Debugging Strategy

- Hook up just the D0, D1 equations first and get your state changes correct
  - Use LEDs to monitor the Q1, Q0 values so you know your current state
  - If you have everything hooked up correctly, and state changes do not match ASM chart, then check your equations!!!!!!
- After state changes are working, then concentrate on one output at a time
  - X first perhaps, then Y